40.5kV 后接避雷器
Rear connector w/arrester

Type：AHY5WZ-51/134
(后接避雷器 Connector w/arrester)

插头避雷器性能参数
Performance parameter of connector w/arrester
额定电压51kV
Rated voltage 51kV
持续运行电压40.8kV
Continuous operation voltage 40.8kV
5kA雷电冲击电流下残压134kV
5kA lightning impulse current residual voltage 134kV
直流1mA下电压U_{1mA}≥73kV
At D.C. 1mA voltage (U_{1mA}) ≥73kV
0.75U_{1mA}直流漏电流≤50μA
Leaking current at D.C.0.75 U_{1mA} ≤50μA
2ms方波冲击容量400A
2ms rectangular current withstand 400A

AMPETEK®
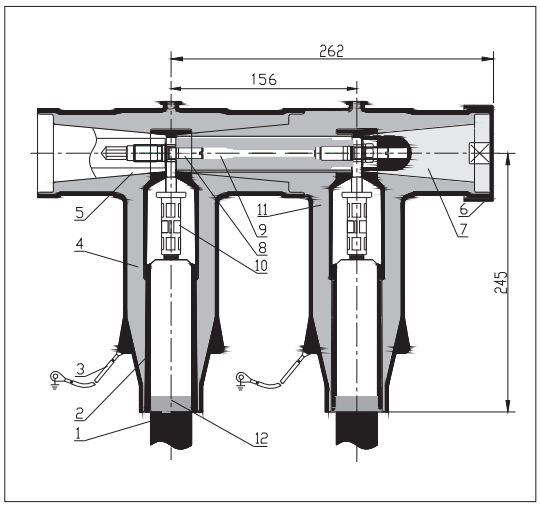
1、电缆 Cable
2、应力锥 Cable adaptor
3、接地线 Earthing wire
4、前接头 Front connector body
5、套管 Bushing
6、封帽 Screen cover
7、绝缘塞 Insulating plug
8、双头螺栓 Bolt
9、铜连接杆 Copper linking rod
10、圆头端子 Compression lug
11、后接头 Rear connector body
12、半导电层 Semi-conductive layer