36kV 屏蔽型前/后接头
Screen front / rear connector

36kV屏蔽型前后接头用于配电系统的电缆分支箱、环网柜、箱变等，保证了该产品可实现多分支供电。用于Φ46/Φ56/91.5/M16 套管全密封连接，用于18/30kV交联电缆，适用电缆截面35～500mm^2。

1. Screen front/rear connector is suitable for cable branch box, ring main unit and pad-mound transformer, etc.
2. Suitable for fully-submersible connection of size Φ46/Φ56/91.5/M16 bushing(meet for EN50180 and EN50181).
3. Apply to 18/30kV XLPE cable, and conductor cross section is 35-500mm^2.

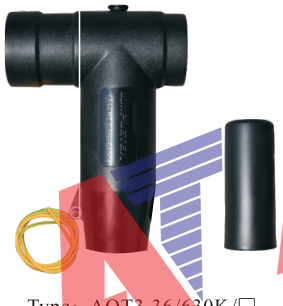

Type：AQT3-36/630K/□
（前接头 Front connector）

产品特点

能更好处理电缆断口处的电场强度，电气性能更优。空间小，独特结构设计，安装方便，容差性更高。

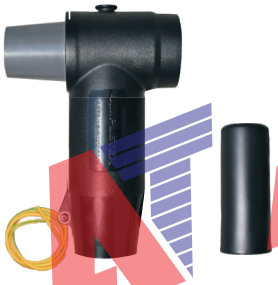

Type：AHT3-36/630K/□
（后接头 Rear connector）

Characteristics

It can balance the electric field intensity, high performance small space, special structure design, easy for installation, higher tolerance.

1、电缆 Cable
2、应力锥 Cable adaptor
3、接地线 Earthing wire
4、前接头 Front connector body
5、套管 Bushing
6、屏蔽封帽 Screen cover
7、绝缘塞 Screen insulating plug
8、双头螺栓 Bolt
9、铜连接杆 Copper linking rod
10、圆头端子 Compression lug
11、后接头 Rear connector body

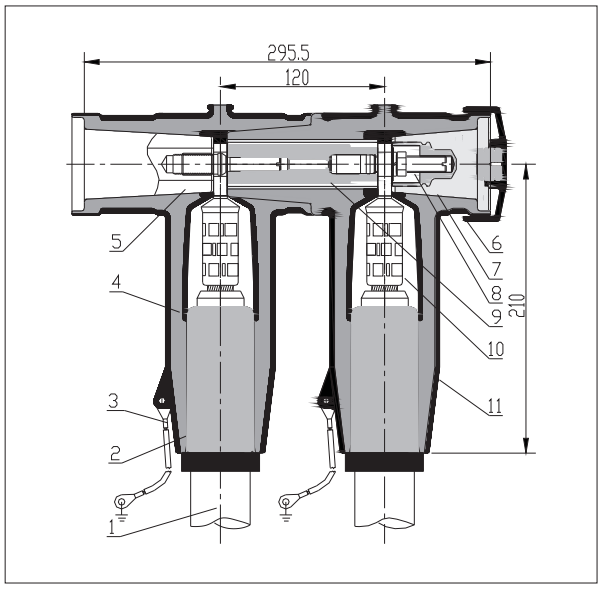

AMPLETEK®